PRODUCT FEATURES

CONSTRUCTION
- 12MM BIRCH VENEER PLYWOOD WITH HPL EXTERIOR FACE AND PVC INTERIOR FACE
- ARMOR HARDWARE

INSTALLED EQUIPMENT (INCLUDED)
- 1X POWERBOARD

INSTALLED DEVICES (NOT INCLUDED)
- 1X HIKVISION DS-D5C65RB 65" DISPLAY

FEATURES
- FOLDABLE TOP COVER
- LIFT-OFF LID
- 1X DUAL MOTORIZED LIFT
- HATCH DOOR LOCATED AT THE BACK
- 14X RECESSED HANDLE
- 4X LARGE LATCH
- 3X BRAKED CASTOR
- 3X NON-BRAKED CASTOR
- 1X LABEL DISH

KEY MEASUREMENTS
- MAXIMUM HEIGHT WHEN LIFTED 2,032MM

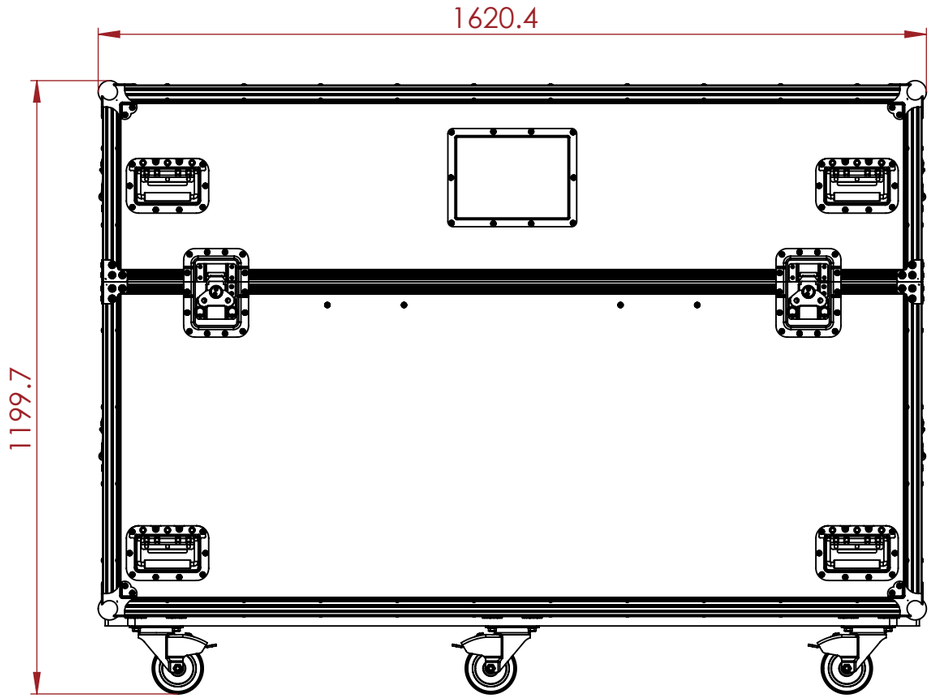

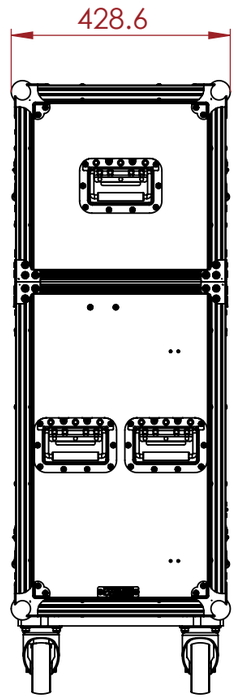

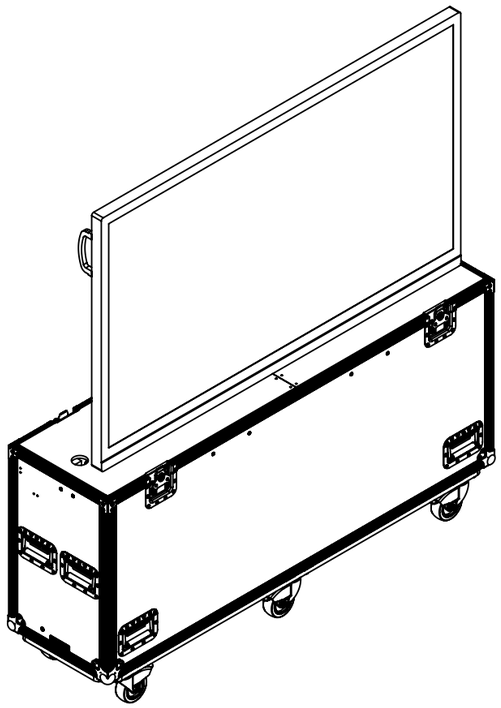

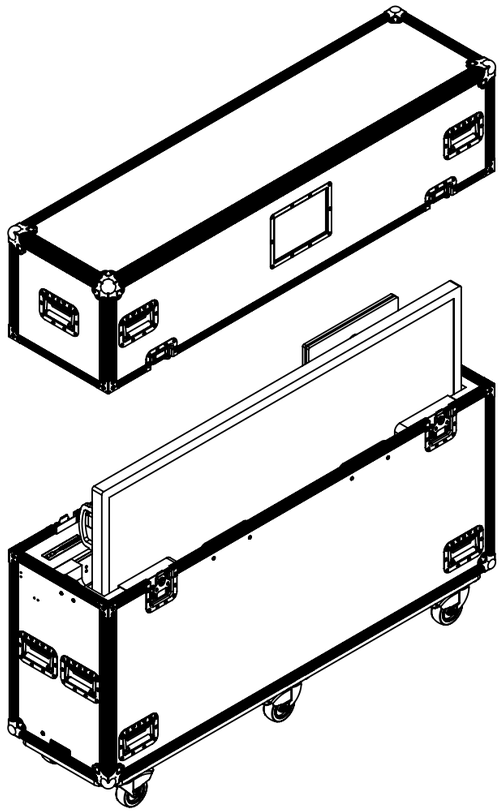

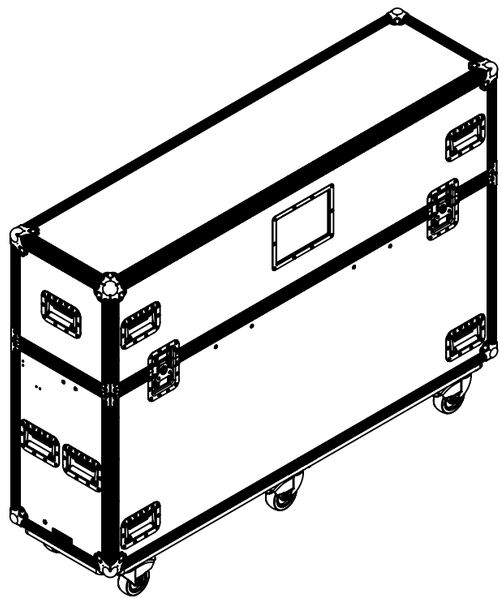

NOTES:
UNLESS SPECIFIED IN THE DRAWING, ALL PRODUCTS DISPLAYED IN THIS DRAWING OTHER THAN THE CASE ITSELF IS NOT PART OF OUR PRODUCT OFFERING.

ESTIMATED WEIGHT (CASE ONLY):
125.53 KG

ITEM CODE:
TVL-HIK-DS-D5C65

DRAWN BY: HA
CHECKED BY: AS

SCALE:
NTS

ARMOR
BUILT TO PROTECT

MAIL : sales@armorcases.com.au
WEB : www.armorcases.com.au